Type: Semi-hermetic piston tandem compressors
Producer: Frascold
Series: ZZ

Model: ZZ 35 106 Y

Technical data

Nominal motor power [kW/HP]:	52 / 70
Cylinder count:	12
Displacement [m³/h]:	212,32
Cylinder capacity [cm³]:	203,37
Cylinder bore [mm]:	68
Cylinder stroke [mm]:	56
RPM [min^{-1}]:	1450
Weight net [kg]:	446
Weight gross [kg]:	490
Oil charge [dm³]:	9

Electrical data

	DOL Y Y	PWS Y / Y
Power supply [V/~/Hz]:	400V/3/50Hz	400V/3/50Hz
Locked rotor current [A]:	225	148
Max. operating current [A]:	61	61

Connections

	milimeters	inches
Suction line:	67	2 5/8"
Discharge line:	35	1 3/8"

R22

Cooling capacity [W]

t_c \ t_e	12.5	7.5	5	0	-5	-10	-15	-20
30	297 960	251 740	230 980	188 900	153 400	123 540	98 540	77 740
40	272 200	229 800	210 740	171 580	138 640	111 020	87 940	68 820
45	259 040	218 580	200 400	162 800	131 200	82 640	64 400	64 400
50	245 640	207 180	189 880	153 880	123 680	98 380	77 360	59 980

Operating conditions: suction gas temperature 20ºC, 0K subcooling
t_c - Condensing temperature [ºC]
t_e - Evaporating temperature [ºC]

R134a

Cooling capacity [W]

t_c \ t_e	12.5	7.5	5	0	-5	-10	-15	-20
50	152 400	125 480	113 960	92 680	74 400	58 800	45 520	34 280
60	131 880	108 480	98 040	79 220	63 060	49 200	37 420	27 420
70	110 740	90 720	81 720	65 520	51 540	39 540	29 320	20 620
80	88 840	72 400	64 980	51 560	39 940	29 920	21 360	14 080

Operating conditions: suction gas temperature 20ºC, 0K subcooling
t_c - Condensing temperature [ºC]
t_e - Evaporating temperature [ºC]

R404A/R507

Cooling capacity [W]

t_c \ t_e	7.5	5	0	-5	-10	-15	-20	-25	-30
30	257 000	235 600	197 660	164 740	136 780	112 060	90 900	72 600	57 300
40	223 060	204 360	171 140	142 220	117 620	95 820	77 140	60 940	47 380
45	205 260	188 000	157 300	130 500	107 660	87 420	70 040	54 960	42 340
50	185 680	170 040	142 120	117 700	96 860	78 340	62 420	48 620	37 020

Operating conditions: suction gas temperature 20ºC, 0K subcooling
t_c - Condensing temperature [ºC]
t_e - Evaporating temperature [ºC]

R407C

Cooling capacity [W]

t_c \ t_e	12.5	7.5	5	0	-5	-10	-15	-20	-25
30	291 940	242 600	220 680	181 460	147 820	119 100	94 660	73 940	56 480
40	260 540	215 920	196 080	160 520	130 000	103 880	81 660	62 800	46 920
45	244 100	201 980	183 220	149 600	120 700	95 980	74 920	57 060	41 980
50	227 140	187 600	169 980	138 360	111 180	87 900	68 060	51 200	36 980

Operating conditions: suction gas temperature 20ºC, 0K subcooling
t_c - Condensing temperature [ºC]
t_e - Evaporating temperature [ºC]

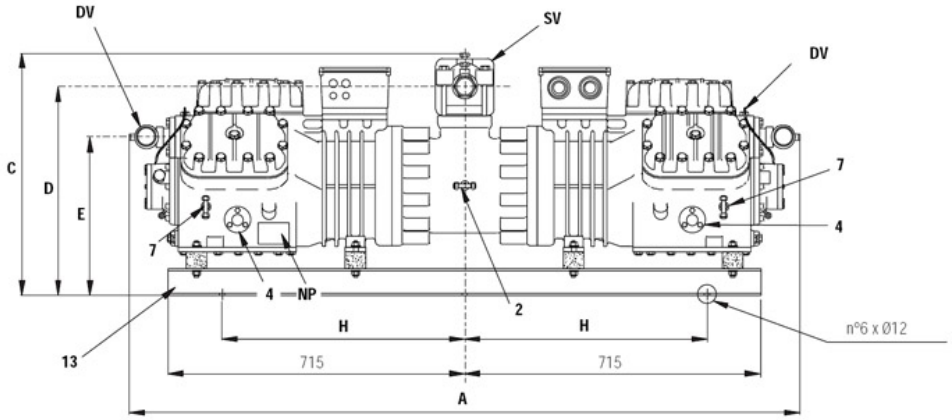

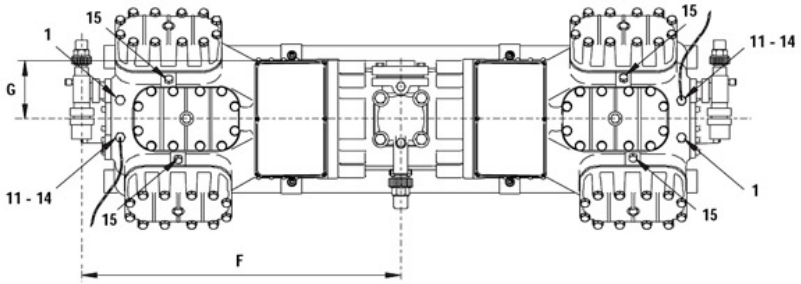

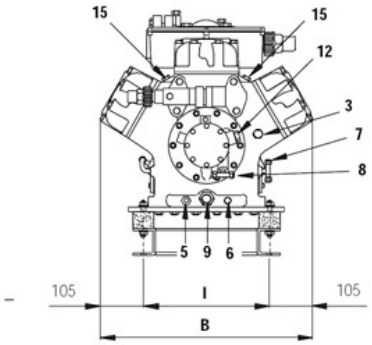

A	1617 mm
B	515 mm
C	585 mm
D	503 mm
E	382 mm
F	769 mm
G	143 mm
H	585 mm
I	305 mm

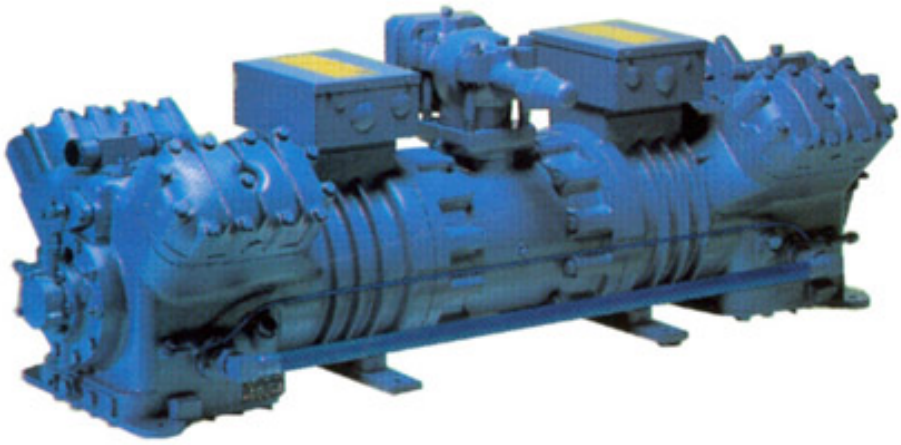

Phone : + 90 232 224 85 10-11
Address : Uluçreis Cd.No:6 Kısık Sanayi Sitesi Menderes/İZMİR
www.oncusogutma.com
Email address :info@oncusogutma.com