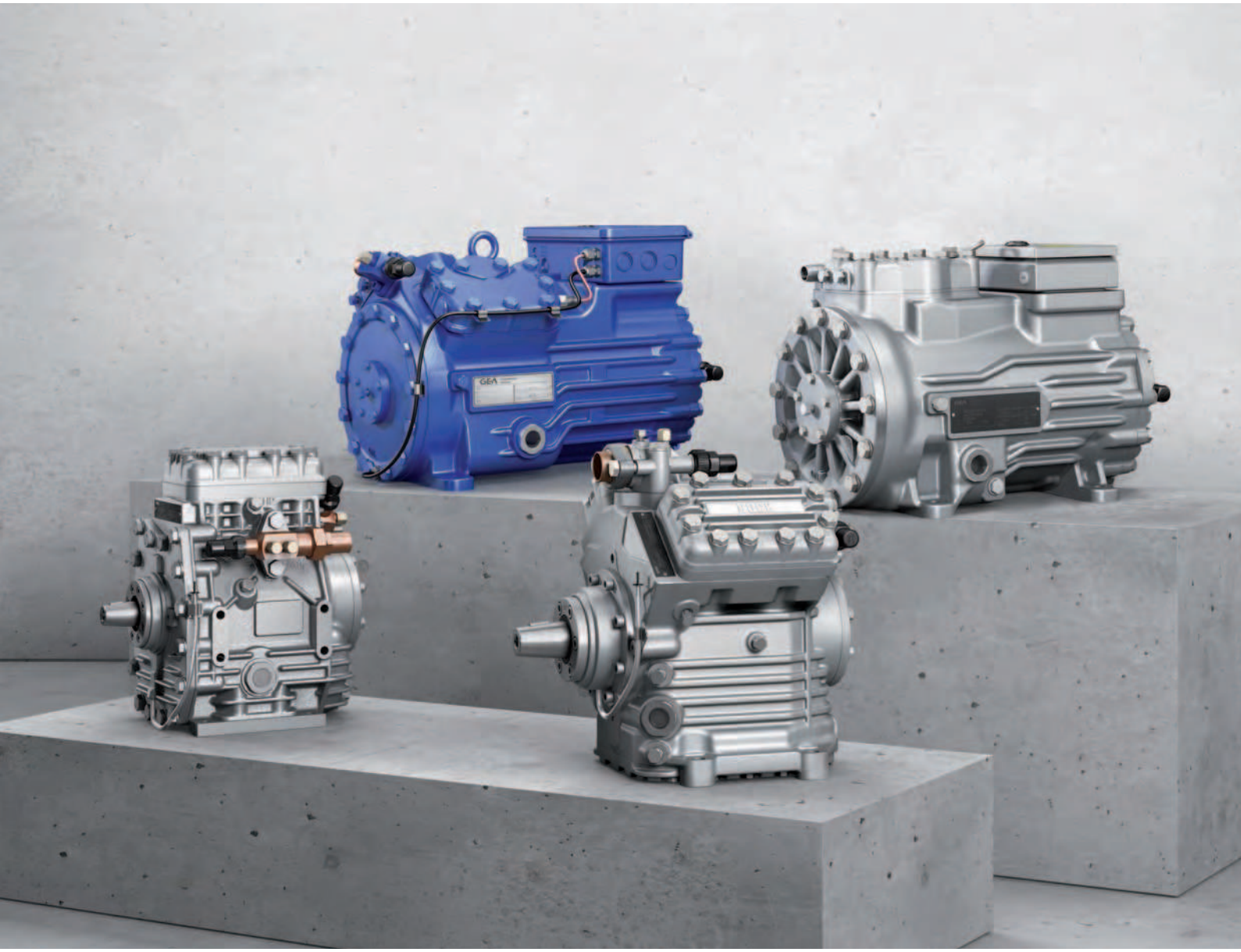

Bock Compressors for Mobile Applications

Vehicle compressors for bus-, railway air-conditioning and transport refrigeration

engineering for a better world

GEA Refrigeration Technologies

GEA Refrigeration Technologies: Your partner for low temperatures

GEA Refrigeration Technologies, part of the internationally active GEA Group, is a synonym for industrial refrigeration technology. Since the end of the 19th century, it has been our business to cool processes and products, and to control the temperature of goods in transport.

You will find our solutions in the food and beverage sector; in the petrochemical, chemical, and pharmaceutical industries; on fishing ships; in natural gas liquefaction; in infrastructure facilities; and in ice factories. We are also at the top with know-how when it comes to refrigeration at leisure facilities. After all, we have been excited about refrigeration for decades now. As a result, our staff enthusiastically goes about its development and production projects – to include preventive and remedial maintenance of your refrigeration systems.

This enthusiasm is highly apparent in the daily work of all companies in our Segment. Whether it's complete systems or individual valves: we have the experience in every section of our company to optimally design, manufacture, and install refrigeration systems. And to take full advantage of this experience, we not only carry out development in our own company: we also manufacture, assemble, and test the core components. A chain is, after all, only as strong as its weakest link: and this also applies equally well to refrigeration technology, cooling processes, and cooling chains.

This makes it all the more important that you have a partner – in GEA Refrigeration Technologies – that has learned to master refrigeration from A to Z. And all of this since 1896, when Willem Grasso founded his refrigeration division. From this history of GEA Refrigeration Technologies, you will profit in the form of technical expertise and top sector know-how.

But we all live in the present and think about the future. We ponder a future in which more and more processes need energy around the world, and fewer natural resources are available. As a result, we have taken it as our goal to create solutions that are not only long-life and cost-effective, but also energy-saving and environment-protecting. We feel obligated to sustainability in many respects. Our objective is to produce longlife and material-saving products over the long run – as well as products that use environmentally benign refrigerants. And we aim to produce efficiently. But our responsibility does not end at the factory gate. As a result, we take great pains to ensure that our systems are energy-efficient and that they protect the climate. With GEA Refrigeration Technologies, you can also count on optimal economy: saving energy indeed means reducing money spent for energy. At the same time, you protect the environment. Thanks to our refrigeration technology, your processes will run more economically and more ecologically. To maintain our standard of living and to assure quality of life for future generations as well.

Our claim of combining economy with saving natural resources is reflected in all components of our company, such as the following: compressors, chillers, heat pumps, ice machines, fittings and valves, control systems, and many, many more. You can find proof of the above throughout the world. Our international corporate network – and above all our reference projects – are spread all over the globe.

09689-08.2012-Gb Subject to change without notice

GEA Bock - More than a compressor

Over 75 years ago, when the refrigeration and air-conditioning industry was still in its infancy, our company's founder, Wilhelm Bock, had a vision: He wanted to build first-class and reliable refrigeration machines. In the following decades Bock developed into one of the world's leading manufacturers of refrigeration and air-conditioning compressors.

As part of GEA Refrigeration Technologies, Bock today offers the right compressor for every application in the areas of bus-, railway air-conditioning and transport refrigeration.

Besides the vehicle compressors of the FK-series for classical Diesel engines, new technologies have moved into GEA Bock's focus. For example special compressors for the use in hybrid systems.
These electric powered, semi-hermetic compressors offer numerous advantages for mobile applications. The aluminum version is for example about 40 % lighter than comparable standard compressors and contributes to the innovative lightweight construction of vehicles.

Based on the current semi-hermetic program there is now a compressor series available for the use with the refrigerant R407C with expanded fields of application.
No matter what your application is – GEA Bock offers you the ideal compressor for your individual demand.

Be inspired. By our new products, our established product series and the entire passion that goes into each of our products.

09689-08.2012-Gb Subject to change without notice

Semi-hermetic compressors HG (HA)

The Bock HG (Hermetic Gas-cooled) range of semi-hermetic compressors offers traditional suction gas-cooled compressor state of the art technology. These compressors of the highest quality standard excel in their running comfort, easy maintenance, efficiency and reliability. Suitable as standard for conventional or chlorine-free HFC refrigerants.
The HA (Hermetic Air-cooled) range, specially engineered by GEA Bock, is available for deep-freezing applications, in particular for use with the refrigerants R22 and R404A.

- Single-stage
- CO_2 compressors subcritical
- CO_2 compressors transcritcal
- R134a compressors
- R407C compressors
- R410A compressors
- ATEX compressors
- HC compressors
- Aluminium compressors
- 2-pole compressors
- Two-stage compressors
- Duplex compressors
- Compressor units with receiver
- Condenser units air-cooled

Vehicle compressors FK

Bock vehicle compressors of the FK range are the result of many years of experience in the domain of mobile cooling systems.
The unsurpassed light, compact, robust design and wide r.p.m. range are only some of the outstanding features of this unique product range of two, four and six cylinder compressors.
A wide variety of designs can be tailored to suit individual requirements.
The so-called K version is a special innovation with a unique valve plate system for maximum requirements in bus and coach air-conditioning systems.

- Compressors for bus and train air-conditioning
- Compressors for transport refrigeration and other applications

Open type compressors F

The F model series provides modern open type compressors for separate drive systems (using V belts or direct couplings). Load transfer through a V pair.
Virtually all drive capacity requirements can be met.
Very compact compressor design, robust and easy to handle. Oil pump lubrication as standard.

- Single-stage compressors
- NH_3 compressors
- Compressor units for direct drive
- NH_3 compressor units for direct drive

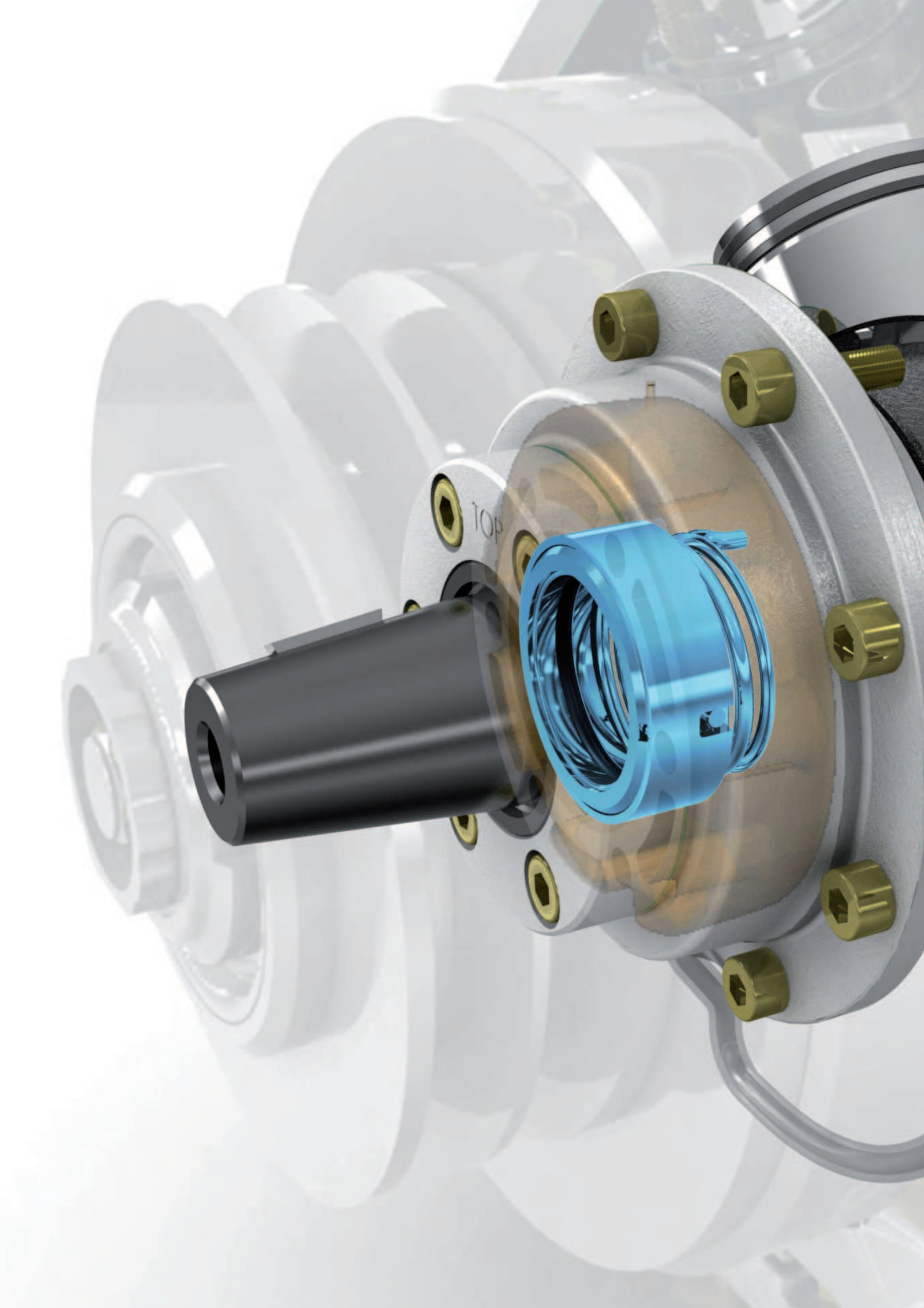
TOP

The difference is in the detail - Characteristics Bock FK Vehicle compressors

Special features

Open type 2-, 4- and 6-cylinder compressors in full-aluminium lightweight construction

Whether in bus- or railway air-conditioning, transport refrigeration or other applications of mobile cooling - Bock FK compressors are specialists around the world.

- Unsurpassed light and compact design
- Highly robust design
- Wide speed range
- Efficient operating performance
- Universal application

Three design variations are available for different areas of application:

- For air-conditioning - the K Design
- For air-conditioning or normal cooling - the N Design
- For deep freezing - the TK Design

The differences are mostly associated with the valve plate version which is adapted to each application range where operational safety and efficiency are concerned.
Additionally we have different solutions for the flexible adaptation of the compressors to your individual requirements.
Talk to us. Our competent team will be pleased to advise you.

Low-wearing long-lifed mechanism

- Solid construction and design
- Classic crankshaft construction with hardened surface
- Double-sided roller bearing mounting design for maximum radial forces
- Aluminium pistons with two-ring assembly
- Aluminium connection rod in divided, screwed design
- Quiet with low vibrations
- Four cylinder construction from 385 cm³
- Six cylinder already from 662 cm³
- Minimum oscillating mass, connecting rods and pistons made out of aluminium
- Dynamic mass balance of the whole drive-mechanism
- High volume pressure area to dampen pulsations

Reliable and safe oil supply

- Self-contained lubrication through an internal rotor pump high performance, independent of rotating direction, compact
- Oil overpressure valve to regulate the oil pressure
- High volume oil sump
- Two sight glasses for checking the oil level (FK40/50), (FK30 one sight glass)

09689-08.2012-Gb Subject to change without notice

Special features

The K Design

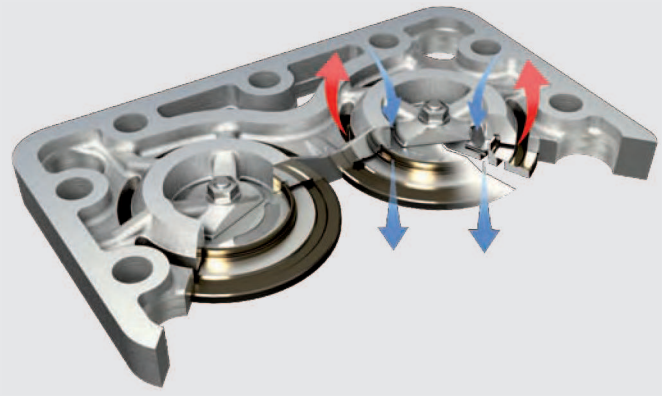

- A special GEA Bock innovation. The unique valve plate system for highest standards - specially developed for bus air-conditioning systems.
- Service valves made out of high quality, impact resistant spring steel. Extremely robust and reliable, not only at constant variations in speed and in pressure, but also where there are liquids. The base plate of this systems is made - of aluminium. The valves are constructed as ring-fin packages and are guided loosely. This means that they are neither exposed to lateral nor torsional powers and thanks to their special construction they cannot fall into the cylinder area or hit the the piston head. The no compromise solution for mobile air conditioning.
- Highest safety and efficiency in all areas of application

The N Design

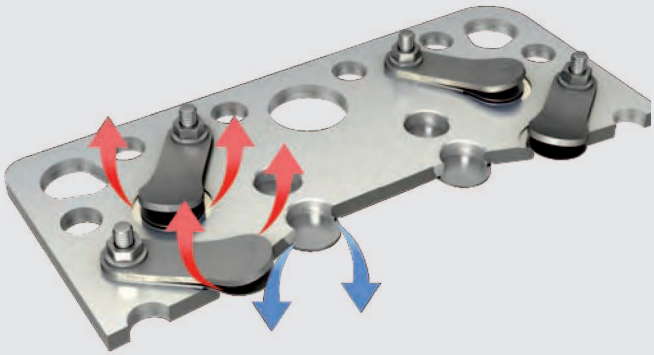

- The cost-effective alternative to the K Design.
- The universal valve plate system. Suitable for both air-conditioning in buses and for other applications. The base plate is designed in steel. The valve units N and TK design are structed as one-sided fixed tongue fins which makes them form a simple and cost-effective construction. In comparison to the K design, the valves are exposed to lateral and torsional powers, which means that the load carrying ability decreases in particular in air-conditioning where there is fluctuating speed or liquid influence.

The TK Design

- A special variant for deep freezing.
- Build on the N valve plate basic concept with additional measures to optimise the charging efficiency at low evaporation temperatures. The piston heads have suction fin contour grooves, which further reduces the dead space and leads to increased performance in the deep-freeze area.

Special features

Integrated oil collection system with a large storage volume

FK30/FK40/FK50:

- Practical drain option through a feely accessible flexible tube
- No dismantling of the clutch necessary

Simply constructed shaft seal

- Tried and tested construction for decades
- Only one O-ring seal, counter ring designed as the screw-on cover
- With oil washing for cooling and lubricating the whole unit
- Easy to change the shaft seal for maintenance purposes

Example:

Shaft seal construction FK40

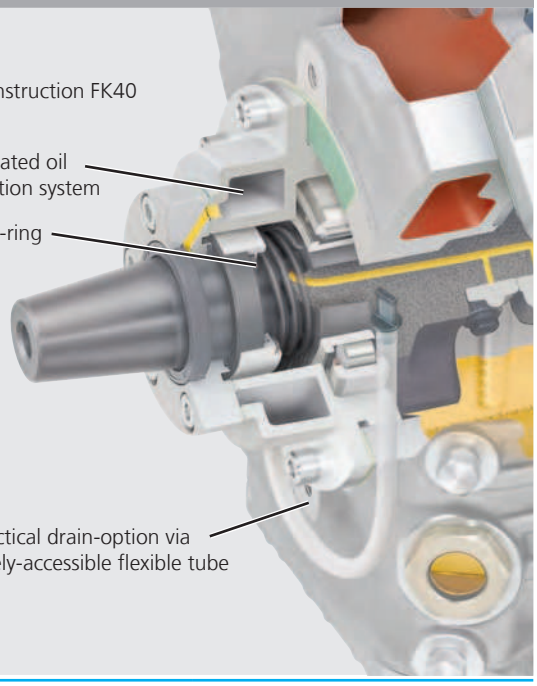

Various drive options

- Conical shaft end for safe force transmission and exact installation of the drive elements
- V-belt drive with electromagnetic clutch or flywheel
- Additional drive types on request

09689-08.2012-Gb Subject to change without notice

Special features

Economic performance regulation (option)

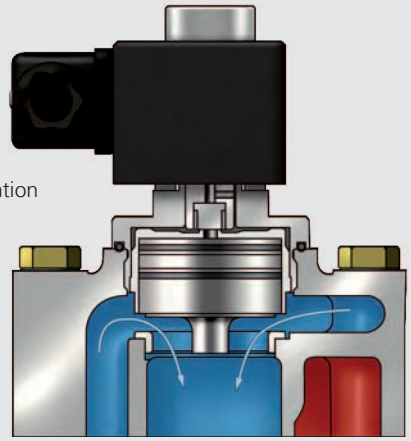

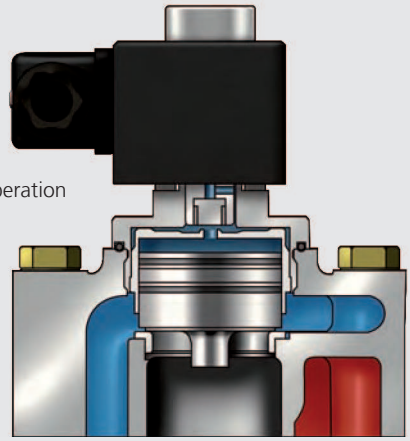

- Blocking of the intake of a cylinder bank with an electromagnetic pilot valve
- Possible residual capacity:
  4-cylinder compressor: 50 % 6-cylinder compressor: 66 %/ 33 %

Variable connection and fixing options

Special design, example:
Suction shut-off valve mounted on cylinderbank
with intermediate adapter

Special design, example:
Suction shut-off valve mounted between the cylinder covers

- Variable position of the suction shut-off valve (FK30/40/50)
- Rotate options for the suction and discharge shut-off valve
- Fixing options for supplementary attachments
- More variants for fixing the compressor
- Customer-made designs on request


GEA

Vehicle Compressors FK for bus- and railway air-conditioning N, K

Type key

FK X 50 / 980 K

- Design [2]
- Swept volume
- Size
- Ester oil filling[1]
- Series

[1] X - Ester oil filling (HFC refrigerant e.g. R134a, R407C)

[2] K - specially for air-conditioning

N - for air-conditioning or normal cooling

The current program

...4 model sizes with 14 capacity stages from 10,3 to 84,9 m³/h (1450 rpm)

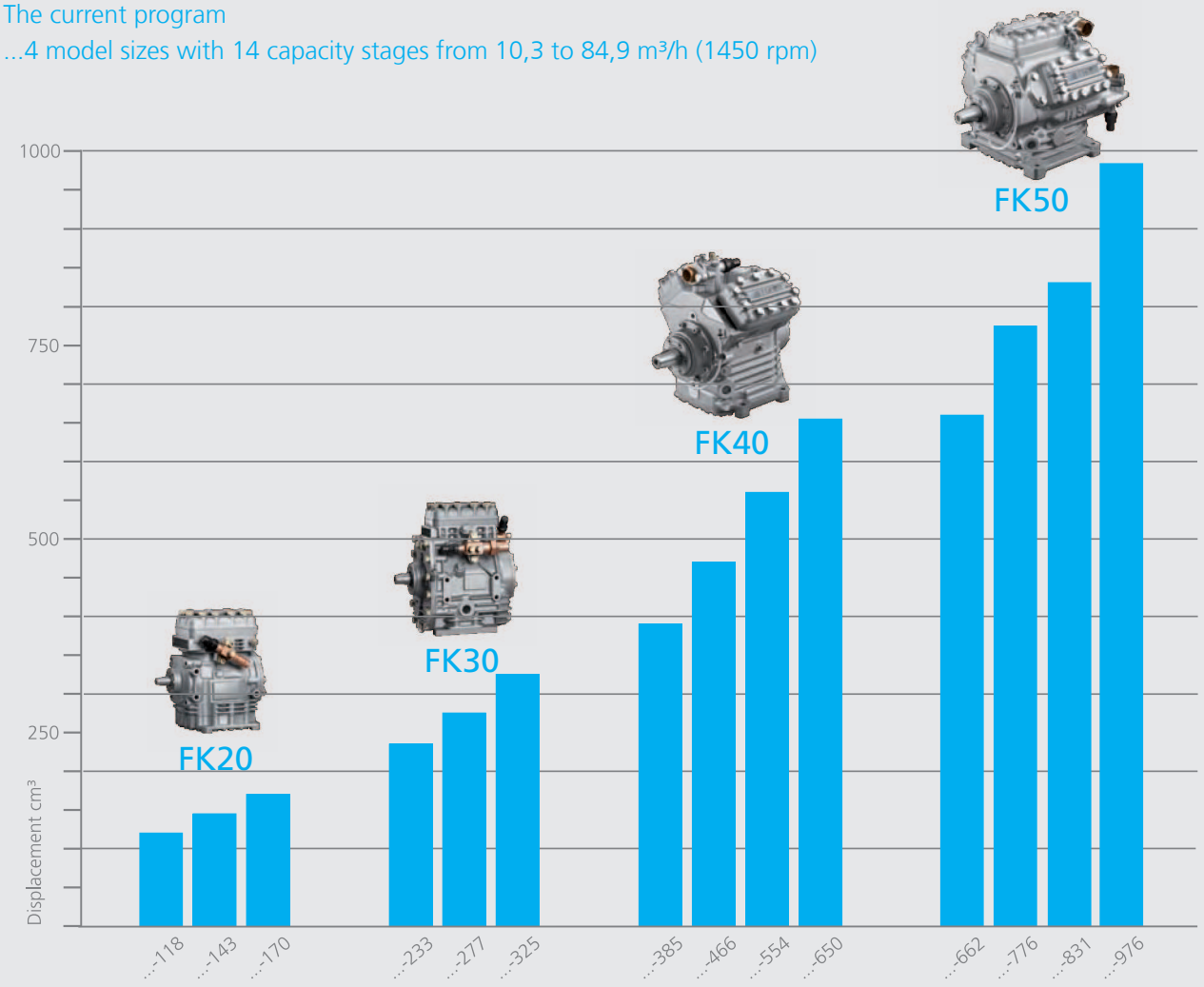

09689-08.2012-Gb Subject to change without notice

R134a Operating limits

FKX20 / FKX30 / FKX40 / FKX50

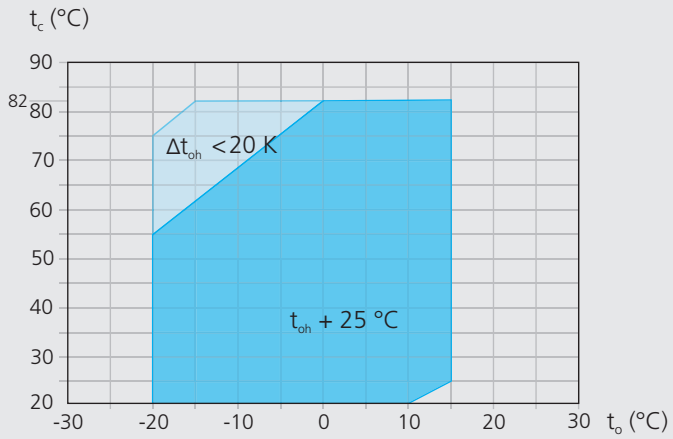

Max. permissible operating pressure (LP/HP)[1]: 19/28 bar

[1] LP = low pressure HP = high pressure

Unlimited application range

Reduced suction gas temperature

t_o Evaporating temperature (°C)
t_c Condensing temperature (°C)
Δt_{Oh} Suction gas superheat (K)
t_{Oh} Suction gas temperature (°C)

Permissible rotation speed:
N Design: 500 - 3000 rpm
(max. rotation speed 3500 rpm)
K Design: 500 - 3500 rpm

R134a Notes

Operating limits

Compressor operation is possible within the limits shown on the application diagrams. Please note the coloured areas. Compressor application limits should not be chosen for design purposes or continuous operation.

Performance data

Performance specifications for the R134a are based on 25 °C suction gas temperatures without liquid subcooling (FKX50/830 and FKX50/980 on 20 °C suction gas temperature). Compressor speed 1450 rpm.
The values can be stated to judge the overall performance at other speed with the help of the calculation factors below.
Performance data for other operating points, see GEA Bock software.

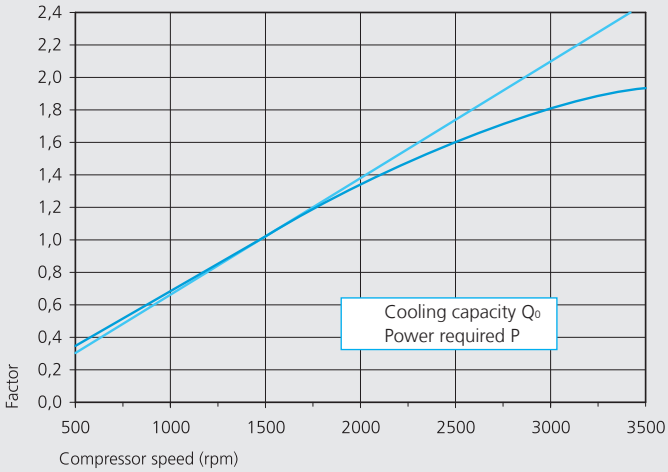

R134a			Performance data							1.450 rpm
Type	Cond. temp. °C		Cooling capacity $\dot{Q}_o$ [W]						Power consumption P [kW]	
			Evaporation temperature °C							
			15	12,5	10	5	0	-5	-10	-15
FKX20/120 N FKX20/120 K	30	Q	9827	8983	8194	6771	5540	4484	3584	2823
		P	0,91	0,95	0,99	1,03	1,02	0,99	0,93	0,85
	40	Q	8789	8020	7302	6009	4895	3940	3129	2443
		P	1,30	1,31	1,32	1,29	1,24	1,16	1,06	0,96
	50	Q	7720	7027	6380	5221	4226	3376	2655	2045
		P	1,65	1,63	1,60	1,52	1,42	1,31	1,18	1,05
	60	Q	6629	6012	5438	4415	3540	2798	2170	1639
		P	1,95	1,90	1,85	1,72	1,58	1,43	1,27	1,13
	70	Q	5522	4982	4483	3598	2847	2214	1682	1232
		P	2,20	2,12	2,05	1,88	1,70	1,52	1,35	1,19
FKX20/145 N FKX20/145 K	30	Q	11890	10870	9915	8193	6704	5425	4336	3416
		P	1,10	1,15	1,20	1,24	1,24	1,20	1,12	1,03
	40	Q	10635	9704	8835	7271	5923	4768	3786	2956
		P	1,58	1,59	1,59	1,56	1,50	1,40	1,29	1,16
	50	Q	9342	8502	7720	6318	5113	4085	3213	2475
		P	2,00	1,97	1,94	1,85	1,72	1,58	1,43	1,27
	60	Q	8021	7274	6580	5342	4284	3386	2626	1984
		P	2,36	2,30	2,23	2,08	1,91	1,73	1,54	1,37
	70	Q	6681	6029	5425	4353	3445	2679	2035	1491
		P	2,66	2,57	2,47	2,27	2,05	1,84	1,63	1,44
FKX20/170 N FKX20/170 K	30	Q	14150	12936	11800	9751	7978	6456	5160	4066
		P	1,31	1,37	1,42	1,48	1,47	1,42	1,34	1,23
	40	Q	12656	11549	10514	8654	7048	5674	4505	3517
		P	1,87	1,89	1,90	1,86	1,78	1,67	1,53	1,38
	50	Q	11117	10118	9188	7519	6085	4861	3823	2945
		P	2,38	2,35	2,31	2,20	2,05	1,88	1,70	1,51
	60	Q	9545	8657	7831	6357	5098	4029	3125	2361
		P	2,81	2,74	2,66	2,48	2,27	2,05	1,84	1,62
	70	Q	7951	7175	6456	5181	4100	3189	2422	1775
		P	3,17	3,06	2,94	2,70	2,44	2,19	1,94	1,72
FKX30/235 N FKX30/235 K	30	Q	19421	17754	16195	13383	10949	8861	7083	5580
		P	1,79	1,89	1,96	2,03	2,02	1,95	1,84	1,68
	40	Q	17370	15850	14431	11877	9674	7787	6183	4827
		P	2,57	2,60	2,60	2,56	2,45	2,29	2,10	1,89
	50	Q	15258	13887	12610	10319	8351	6672	5247	4042
		P	3,26	3,22	3,17	3,01	2,81	2,58	2,33	2,07
	60	Q	13100	11881	10748	8725	6997	5530	4289	3240
		P	3,86	3,76	3,65	3,40	3,12	2,82	2,52	2,23
	70	Q	10912	9847	8861	7110	5627	4376	3324	2436
		P	4,35	4,20	4,04	3,71	3,36	3,00	2,67	2,35
FKX30/275 N FKX30/275 K	30	Q	23112	21129	19273	15927	13031	10545	8429	6641
		P	2,13	2,24	2,33	2,41	2,41	2,32	2,18	2,00
	40	Q	20672	18863	17173	14134	11513	9268	7359	5745
		P	3,06	3,09	3,10	3,04	2,91	2,72	2,50	2,25
	50	Q	18158	16527	15007	12280	9938	7940	6244	4810
		P	3,88	3,84	3,77	3,59	3,35	3,07	2,77	2,47
	60	Q	15590	14139	12791	10383	8327	6581	5104	3856
		P	4,59	4,47	4,34	4,04	3,71	3,35	3,00	2,65
	70	Q	12987	11718	10545	8462	6697	5208	3956	2899
		P	5,17	5,00	4,81	4,41	3,99	3,57	3,17	2,80
FKX30/325 N FKX30/325 K	30	Q	27125	24797	22619	18692	15293	12376	9892	7794
		P	2,50	2,63	2,73	2,83	2,82	2,73	2,56	2,35
	40	Q	24260	22137	20155	16588	13511	10877	8636	6742
		P	3,59	3,63	3,63	3,57	3,42	3,20	2,93	2,64
	50	Q	21311	19396	17612	14412	11664	9319	7329	5646
		P	4,56	4,50	4,43	4,21	3,93	3,60	3,25	2,90
	60	Q	18297	16594	15012	12186	9773	7723	5990	4525
		P	5,38	5,25	5,10	4,75	4,35	3,94	3,52	3,11
	70	Q	15241	13753	12376	9931	7859	6112	4643	3402
		P	6,07	5,87	5,65	5,18	4,69	4,20	3,72	3,29
FKX40/390 N FKX40/390 K	30	Q	32100	29345	26769	22120	18098	14646	11707	9223
		P	2,96	3,12	3,23	3,35	3,34	3,23	3,03	2,78
	40	Q	28711	26198	23852	19631	15990	12872	10221	7979
		P	4,25	4,29	4,30	4,22	4,04	3,78	3,47	3,12
	50	Q	25220	22954	20842	17056	13803	11028	8673	6681
		P	5,39	5,33	5,24	4,98	4,65	4,26	3,85	3,43
	60	Q	21653	19638	17765	14421	11565	9140	7089	5355
		P	6,37	6,21	6,03	5,62	5,15	4,66	4,16	3,69
	70	Q	18037	16276	14646	11752	9301	7234	5494	4026
		P	7,19	6,94	6,68	6,13	5,55	4,96	4,41	3,89

Relating to 25 °C suction gas temperature,
without liquid subcooling

Reduced suction gas temperature

09689-08.2012-Gb Subject to change without notice

R134a			Performance data							1.450 rpm
Type	Cond. temp. °C		Cooling cacapity $\dot{Q}_o$ [W]						Power consumption P [kW]	
			Evaporating temperature °C							
			15	12,5	10	5	0	-5	-10	-15
FKX40/470 N FKX40/470 K	30	Q	38841	35508	32390	26765	21899	17722	14165	11160
		P	3,58	3,77	3,91	4,05	4,04	3,91	3,67	3,37
	40	Q	34740	31700	28861	23753	19347	15575	12367	9655
		P	5,15	5,20	5,20	5,11	4,89	4,58	4,20	3,78
	50	Q	30516	27774	25219	20638	16702	13344	10494	8084
		P	6,52	6,45	6,34	6,03	5,63	5,16	4,66	4,15
	60	Q	26201	23762	21496	17450	13994	11060	8578	6479
		P	7,71	7,52	7,30	6,80	6,23	5,64	5,04	4,46
	70	Q	21825	19693	17721	14220	11254	8753	6648	4871
		P	8,70	8,40	8,08	7,41	6,71	6,01	5,33	4,71
FKX40/560 N FKX40/560 K	30	Q	46224	42257	38547	31853	26062	21090	16858	13281
		P	4,26	4,49	4,65	4,83	4,81	4,65	4,37	4,00
	40	Q	41343	37725	34347	28268	23025	18535	14718	11490
		P	6,12	6,18	6,19	6,08	5,82	5,45	5,00	4,50
	50	Q	36316	33053	30013	24561	19877	15880	12489	9621
		P	7,77	7,67	7,54	7,17	6,69	6,14	5,54	4,94
	60	Q	31181	28278	25582	20767	16654	13162	10208	7711
		P	9,18	8,95	8,69	8,09	7,42	6,71	5,99	5,31
	70	Q	25973	23437	21090	16924	13393	10416	7912	5797
		P	10,35	10,00	9,62	8,82	7,99	7,15	6,34	5,60
FKX40/655 N FKX40/655 K	30	Q	54249	49594	45239	37383	30586	24752	19784	15587
		P	5,01	5,27	5,46	5,66	5,65	5,46	5,13	4,70
	40	Q	48521	44275	40310	33176	27022	21753	17273	13485
		P	7,19	7,26	7,27	7,14	6,83	6,39	5,86	5,28
	50	Q	42621	38792	35224	28825	23328	18637	14657	11291
		P	9,11	9,01	8,85	8,42	7,86	7,21	6,50	5,79
	60	Q	36594	33188	30023	24372	19545	15447	11980	9050
		P	10,77	10,50	10,20	9,49	8,71	7,87	7,04	6,23
	70	Q	30483	27506	24751	19862	15718	12225	9285	6804
		P	12,14	11,73	11,29	10,35	9,37	8,39	7,44	6,58
FKX50/660 N FKX50/660 K	30	Q	55186	50450	46020	38029	31114	25179	20126	15856
		P	5,09	5,36	5,56	5,76	5,75	5,55	5,22	4,78
	40	Q	49359	45039	41006	33749	27489	22129	17571	13718
		P	7,31	7,38	7,39	7,26	6,95	6,51	5,96	5,37
	50	Q	43357	39462	35832	29322	23731	18959	14910	11486
		P	9,27	9,16	9,00	8,56	7,99	7,33	6,62	5,89
	60	Q	37226	33761	30542	24793	19883	15714	12187	9206
		P	10,96	10,68	10,37	9,66	8,86	8,01	7,16	6,34
	70	Q	31009	27981	25179	20205	15990	12436	9446	6921
		P	12,35	11,93	11,48	10,53	9,53	8,54	7,57	6,69
FKX50/775 N FKX50/775 K	30	Q	64767	59209	54010	44631	36516	29551	23620	18609
		P	5,98	6,29	6,52	6,76	6,74	6,51	6,12	5,61
	40	Q	57928	52859	48125	39608	32261	25971	20622	16099
		P	8,58	8,66	8,68	8,52	8,16	7,63	7,00	6,30
	50	Q	50885	46313	42053	34413	27851	22251	17499	13480
		P	10,88	10,75	10,57	10,05	9,38	8,60	7,76	6,92
	60	Q	43689	39622	35844	29097	23335	18442	14303	10804
		P	12,86	12,54	12,17	11,34	10,40	9,40	8,40	7,44
	70	Q	36393	32838	29550	23712	18766	14595	11085	8123
		P	14,50	14,00	13,48	12,36	11,19	10,02	8,89	7,85
FKX50/830 N FKX50/830 K	30	Q	69133	63194	57636	47606	38926	31477	25144	19808
		P	6,40	6,74	7,00	7,26	7,24	6,99	6,57	6,02
	40	Q	61668	56269	51225	42145	34309	27601	21904	17099
		P	9,20	9,29	9,31	9,15	8,76	8,19	7,51	6,76
	50	Q	53991	49141	44620	36507	29533	23583	18538	14282
		P	11,66	11,53	11,34	10,79	10,07	9,23	8,33	7,41
	60	Q	46161	41869	37879	30749	24654	19479	15104	11413
		P	13,78	13,44	13,06	12,16	11,16	10,08	9,01	7,97
	70	Q	38235	34508	31058	24929	19730	15346	11658	8550
		P	15,53	15,01	14,45	13,26	12,01	10,75	9,53	8,42
FKX50/980 N FKX50/980 K	30	Q	81175	74192	67663	55889	45709	36976	29545	23272
		P	7,54	7,93	8,21	8,51	8,49	8,20	7,71	7,07
	40	Q	72420	66072	60145	49486	40297	32433	25748	20098
		P	10,80	10,90	10,91	10,71	10,26	9,61	8,82	7,94
	50	Q	63408	57703	52390	42865	34688	27713	21794	16787
		P	13,68	13,52	13,28	12,64	11,80	10,83	9,78	8,71
	60	Q	54208	49158	44468	36098	28953	22887	17754	13411
		P	16,17	15,76	15,30	14,25	13,08	11,83	10,58	9,37
	70	Q	44893	40507	36451	29256	23162	18025	13699	10040
		P	18,24	17,62	16,95	15,55	14,08	12,61	11,19	9,89

Relating to 25°C suction gas temperature
(FKX50/830 and FKX50/980 on 20 °C suction gas temperature)
without liquid subcooling

Reduced suction gas temperature

R407C Operating limits

FKX20 / FKX30 / FKX40 / FKX50

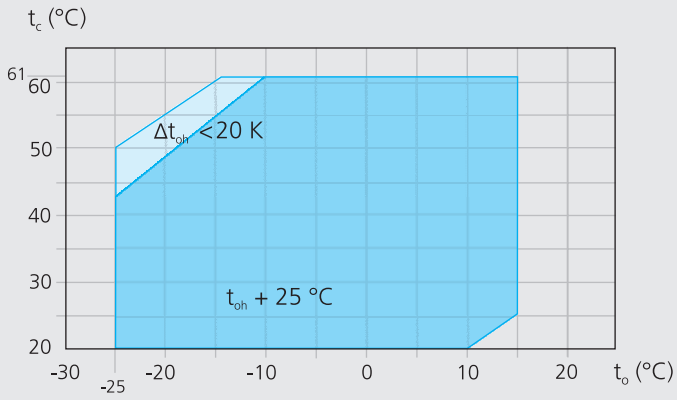

Max. permissible operating pressure (LP/HP)[1]: 19/28 bar

[1] LP = low pressure HP = high pressure

Unlimited application range

Reduced suction gas temperature

t_o Evaporating temperature (°C)
t_c Condensing temperature (°C)
Δt_{Oh} Suction gas superheat (K)
t_{Oh} Suction gas temperature (°C)

Permissible rotation speed:
N Design: 500 - 2600 rpm
K Design:: 500 - 3500 rpm

R407C Notes

Operating limits

Compressor operation is possible within the limits shown on the application diagrams. Please note the coloured areas. Compressor application limits should not be chosen for design purposes or continuous operation.

Performance data

The performance data for R407C are based on 25°C suction gas temperatures without liquid subcooling (FKX50/830 and FKX50/980 on 20 °C suction gas temperature). Compressor speed 1450 rpm.
The values can be stated to judge the overall performance at other speed with the help of the calculation factors below.
Performance data for other operating points, see GEA Bock software.

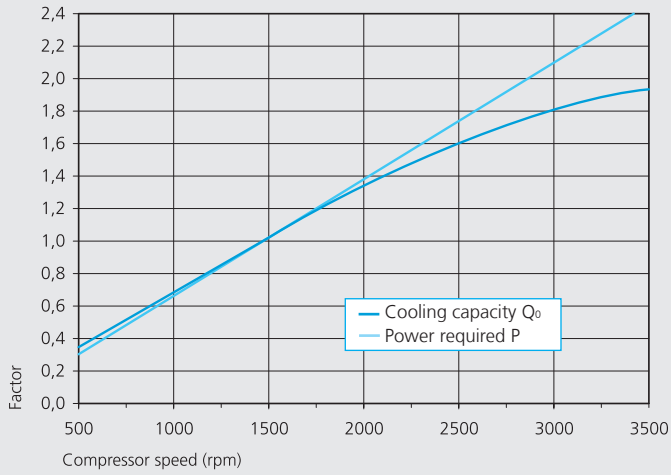

09689-08.2012-Gb Subject to change without notice

R407C			Performance data							1.450 rpm
Type	Cond. temp. °C		Cooling capacity $\dot{Q}_o$ [W]						Power consumption P [kW]	
			Evaporation temperature °C							
			15	12,5	10	5	0	-5	-10	-15
FKX20/120 N FKX20/120 K	30	Q	13852	12688	11599	9630	7922	6452	5195	4129
		P	1,37	1,45	1,51	1,57	1,58	1,53	1,44	1,33
	40	Q	12393	11334	10344	8558	7013	5686	4552	3588
		P	2,02	2,05	2,05	2,02	1,94	1,82	1,67	1,52
	50	Q	10876	9925	9037	7442	6067	4889	3884	3030
		P	2,60	2,57	2,52	2,40	2,25	2,07	1,88	1,69
FKX20/145 N FKX20/145 K	30	Q	16679	15278	13966	11596	9540	7769	6256	4972
		P	1,64	1,74	1,81	1,89	1,90	1,84	1,74	1,60
	40	Q	14923	13648	12455	10305	8445	6846	5481	4320
		P	2,44	2,46	2,47	2,43	2,33	2,19	2,01	1,83
	50	Q	13097	11951	10882	8961	7305	5887	4677	3648
		P	3,13	3,09	3,04	2,89	2,71	2,49	2,26	2,03
FKX20/170 N FKX20/170 K	30	Q	19904	18232	16666	13837	11384	9271	7465	5933
		P	1,96	2,08	2,17	2,26	2,27	2,20	2,07	1,91
	40	Q	17808	16286	14863	12297	10077	8170	6540	5155
		P	2,91	2,94	2,95	2,90	2,78	2,61	2,40	2,18
	50	Q	15629	14261	12985	10693	8717	7025	5581	4354
		P	3,73	3,68	3,62	3,45	3,23	2,97	2,70	2,42
FKX30/235 N FKX30/235 K	30	Q	27301	25007	22860	18980	15614	12716	10240	8138
		P	2,69	2,85	2,97	3,10	3,11	3,01	2,85	2,63
	40	Q	24426	22338	20386	16867	13823	11206	8971	7071
		P	3,99	4,03	4,05	3,98	3,82	3,58	3,30	2,99
	50	Q	21437	19561	17812	14667	11957	9636	7656	5971
		P	5,12	5,06	4,97	4,74	4,43	4,07	3,70	3,32
FKX30/275 N FKX30/275 K	30	Q	32410	29687	27138	22532	18536	15096	12156	9661
		P	3,20	3,38	3,52	3,68	3,69	3,58	3,38	3,12
	40	Q	28998	26519	24202	20024	16409	13303	10650	8394
		P	4,74	4,79	4,80	4,72	4,53	4,25	3,91	3,55
	50	Q	25449	23222	21145	17412	14195	11439	9088	7089
		P	6,07	6,00	5,90	5,62	5,26	4,84	4,39	3,94
FKX30/325 N FKX30/325 K	30	Q	38060	34863	31869	26460	21768	17728	14275	11345
		P	3,75	3,97	4,14	4,32	4,33	4,20	3,97	3,66
	40	Q	34052	31142	28420	23515	19270	15622	12506	9858
		P	5,56	5,62	5,64	5,55	5,32	4,99	4,60	4,17
	50	Q	29885	27270	24831	20447	16670	13433	10673	8325
		P	7,13	7,05	6,93	6,60	6,17	5,68	5,15	4,63
FKX40/390 N FKX40/390 K	30	Q	45052	41268	37725	31322	25767	20985	16898	13430
		P	4,44	4,70	4,90	5,11	5,13	4,97	4,70	4,33
	40	Q	40309	36863	33642	27835	22811	18492	14804	11669
		P	6,58	6,66	6,67	6,57	6,30	5,91	5,44	4,93
	50	Q	35376	32280	29393	24204	19732	15901	12634	9854
		P	8,44	8,35	8,21	7,82	7,31	6,72	6,10	5,48
FKX40/470 N FKX40/470 K	30	Q	54466	49891	45607	37866	31151	25369	20429	16236
		P	5,37	5,69	5,92	6,18	6,20	6,01	5,68	5,24
	40	Q	48732	44566	40672	33651	27577	22356	17897	14107
		P	7,96	8,05	8,07	7,94	7,61	7,15	6,58	5,96
	50	Q	42767	39025	35535	29262	23855	19224	15274	11913
		P	10,21	10,09	9,92	9,45	8,83	8,13	7,38	6,63
FKX40/560 N FKX40/560 K	30	Q	64956	59500	54391	45159	37151	30256	24363	19363
		P	6,41	6,78	7,06	7,37	7,39	7,17	6,77	6,25
	40	Q	58117	53149	48505	40132	32888	26662	21344	16824
		P	9,49	9,60	9,62	9,47	9,08	8,52	7,85	7,11
	50	Q	51004	46542	42379	34897	28450	22926	18215	14208
		P	12,17	12,03	11,83	11,27	10,54	9,69	8,80	7,90
FKX40/655 N FKX40/655 K	30	Q	76117	69723	63736	52918	43534	35454	28549	22690
		P	7,50	7,95	8,28	8,64	8,66	8,40	7,93	7,32
	40	Q	68103	62282	56839	47028	38539	31243	25011	19715
		P	11,12	11,25	11,28	11,10	10,64	9,99	9,19	8,33
	50	Q	59768	54538	49660	40893	33338	26865	21345	16649
		P	14,26	14,10	13,86	13,20	12,35	11,36	10,31	9,26

Relating to 25 °C suction gas temperature,
without liquid subcooling

R407C			Performance data							1.450 rpm
Type	Cond. temp. °C		Cooling capacity $\dot{Q}_o$ [W]							Power consumption P [kW]
			Evaporation temperature °C							
			15	12,5	10	5	0	-5	-10	-15
FKX50/660 N FKX50/660 K	30	Q	77469	70961	64868	53858	44307	36084	29056	23093
		P	7,64	8,09	8,43	8,80	8,81	8,55	8,08	7,45
	40	Q	69312	63388	57849	47863	39223	31798	25456	20065
		P	11,32	11,45	11,48	11,29	10,83	10,16	9,36	8,48
	50	Q	60829	55507	50542	41620	33930	27342	21724	16945
		P	14,52	14,35	14,11	13,44	12,57	11,56	10,49	9,43
FKX50/775 N FKX50/775 K	30	Q	90911	83275	76124	63204	51995	42345	34098	27100
		P	8,97	9,49	9,88	10,31	10,34	10,03	9,47	8,74
	40	Q	81339	74386	67887	56168	46029	37316	29873	23547
		P	13,28	13,43	13,46	13,25	12,71	11,93	10,98	9,95
	50	Q	71384	65139	59312	48842	39818	32087	25494	19885
		P	17,03	16,84	16,56	15,77	14,75	13,57	12,31	11,06
FKX50/830 N FKX50/830 K	30	Q	97448	89219	81521	67628	55599	45259	36437	28960
		P	9,61	10,17	10,59	11,06	11,08	10,76	10,16	9,38
	40	Q	86978	79505	72526	59961	49111	39803	31864	25122
		P	14,24	14,39	14,43	14,20	13,62	12,78	11,77	10,67
	50	Q	76101	69409	63173	51984	42362	34133	27126	21168
		P	18,26	18,05	17,74	16,89	15,79	14,53	13,19	11,85
FKX50/980 N FKX50/980 K	30	Q	114388	104740	95712	79413	65292	53148	42782	33993
		P	11,30	11,96	12,44	12,98	13,00	12,61	11,91	11,00
	40	Q	102124	93359	85170	70423	57681	46744	37413	29488
		P	16,71	16,89	16,94	16,66	15,98	15,00	13,81	12,52
	50	Q	89369	81517	74199	61062	49759	40090	31854	24852
		P	21,41	21,17	20,81	19,83	18,54	17,07	15,49	13,92

Relating to 25°C suction gas temperature
(FKX50/830 and FKX50/980 on 20 °C suction gas temperature)
without liquid subcooling

09689-08.2012-Gb Subject to change without notice

Technical data

FK Type	Number of cylinders	Swept volume	Displacement (1450 rpm)	Weight	Connections		Oil charge
					Discharge line DV	Suction line SV	
		cm³	m³/h	kg	mm I inch	mm I inch	Ltr.
FK20/120 N FK20/120 K	2	118	10,3	15	16 I 5/8	16 I 5/8	0,7
FK20/145 N FK20/145 K	2	143	12,4	14	16 I 5/8	16 I 5/8	0,7
FK20/170 N FK20/170 K	2	170	14,8	14	16 I 5/8	16 I 5/8	0,7
FK30/235 N FK30/235 K	2	233	20,3	25	16 I 5/8	22 I 7/8	2,0
FK30/275 N FK30/275 K	2	277	24,1	25	22 I 7/8	28 I 1 1/8	2,0
FK30/325 N FK30/325 K	2	325	28,3	25	22 I 7/8	28 I 1 1/8	2,0
FK40/390 N FK40/390 K	4	385	33,5	34	22 I 7/8	28 I 1 1/8	2,0
FK40/470 N FK40/470 K	4	466	40,5	33	28 I 1 1/8	35 I 1 3/8	2,0
FK40/560 N FK40/560 K	4	554	48,3	33	28 I 1 1/8	35 I 1 3/8	2,0
FK40/655 N FK40/655 K	4	650	56,6	31	35 I 1 3/8	35 I 1 3/8	2,0
FK50/660 N FK50/660 K	6	662	57,6	42	35 I 1 3/8	2 x 35 I 1 3/8	2,5
FK50/775 N FK50/775 K	6	776	67,6	41	35 I 1 3/8	2 x 35 I 1 3/8	2,5
FK50/830 N FK50/830 K	6	831	72,3	43	35 I 1 3/8	2 x 35 I 1 3/8	2,5
FK50/980 N FK50/980 K	6	976	84,9	41	35 I 1 3/8	2 x 35 I 1 3/8	2,5

For additional technical data see GEA Bock software.

Dimensions and connections

FK20	FK20/120 K FK20/120 N	FK20/145 K FK20/145 N	FK20/170 K FK20/170 N

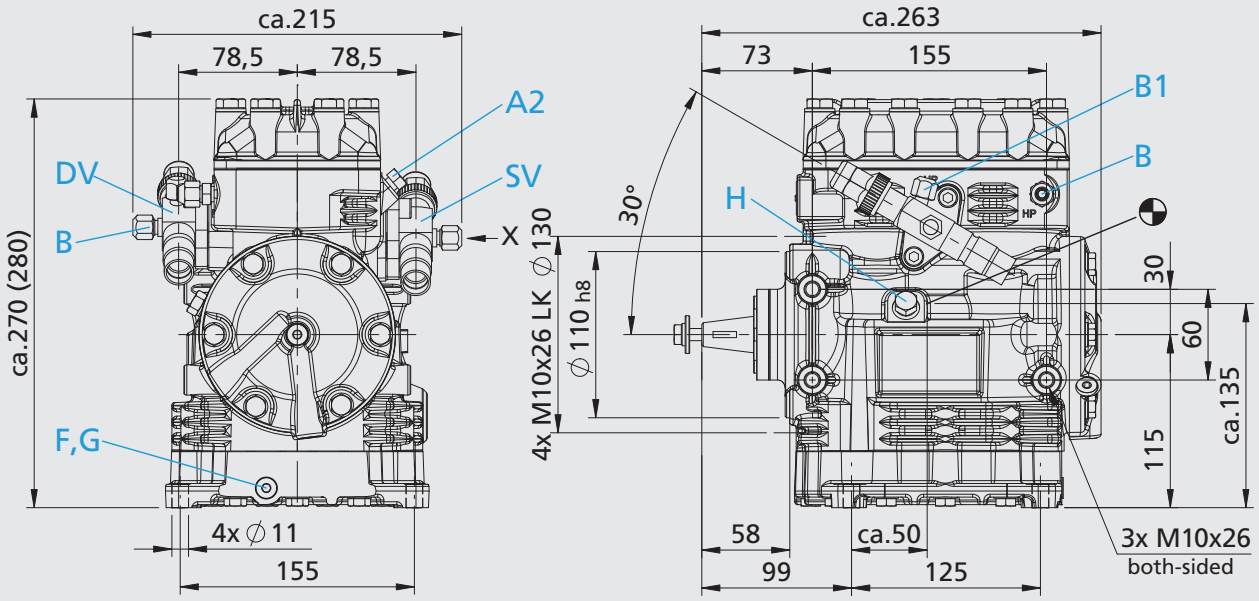

Dimensions in ( ) = K Design

Shaft end	View X

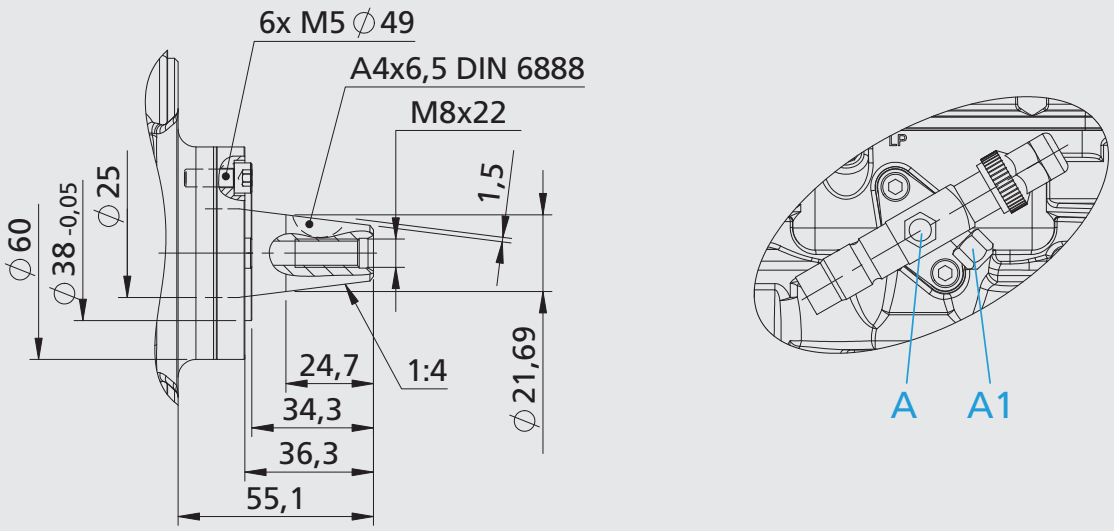

Dimensions in mm
Centre of gravity

Connections see page 26

09689-08.2012-Gb Subject to change without notice

Dimensions and connections

FK30

	FK30/235 K FK30/235 N	FK30/275 K FK30/275 N	FK30/325 K FK30/325 N

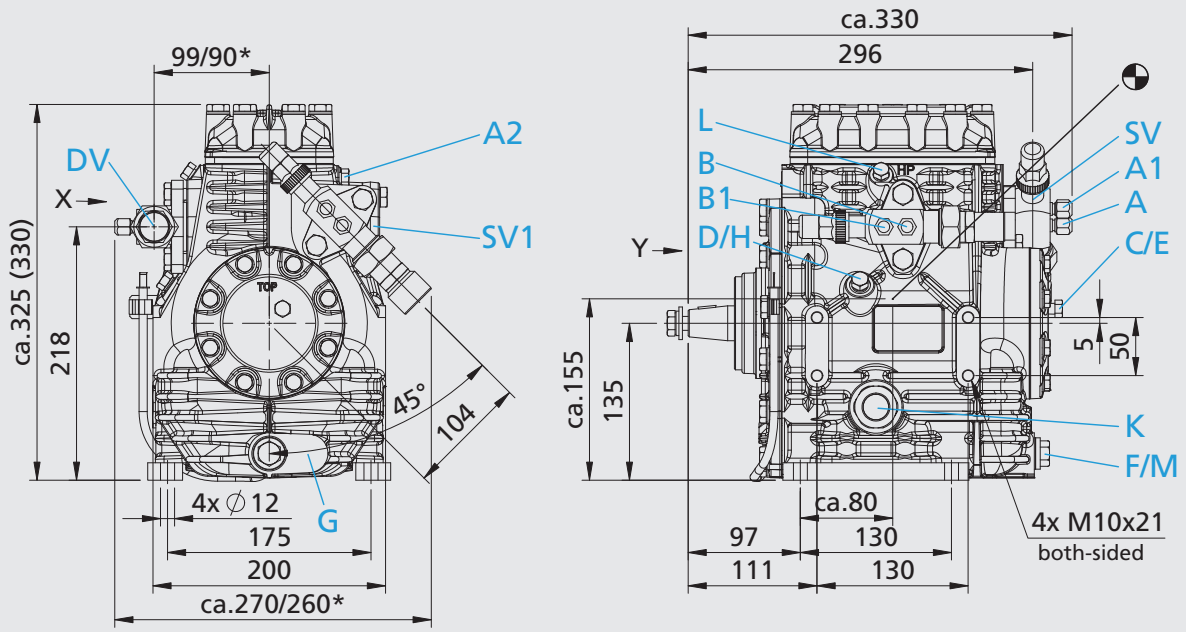

* = FK 30 /235
Dimensions in ( ) = K Design

Shaft end

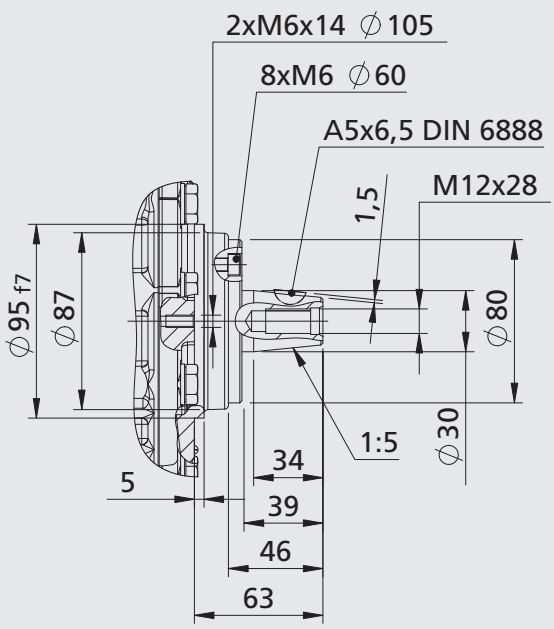

View X

Discharge shut-off valve FK30/235

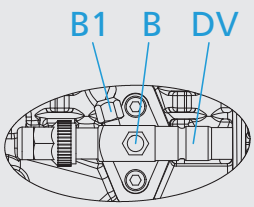

View Y

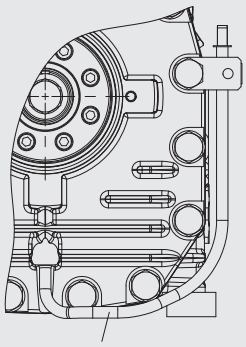

Leak oil drain hose

Dimensions in mm
Centre of gravity

Connections see page 26

Dimensions and connections

FK40	FK40/390 K FK40/390 N	FK40/470 K FK40/470 N	FK40/560 K FK40/560 N	FK40/655 K FK40/655 N

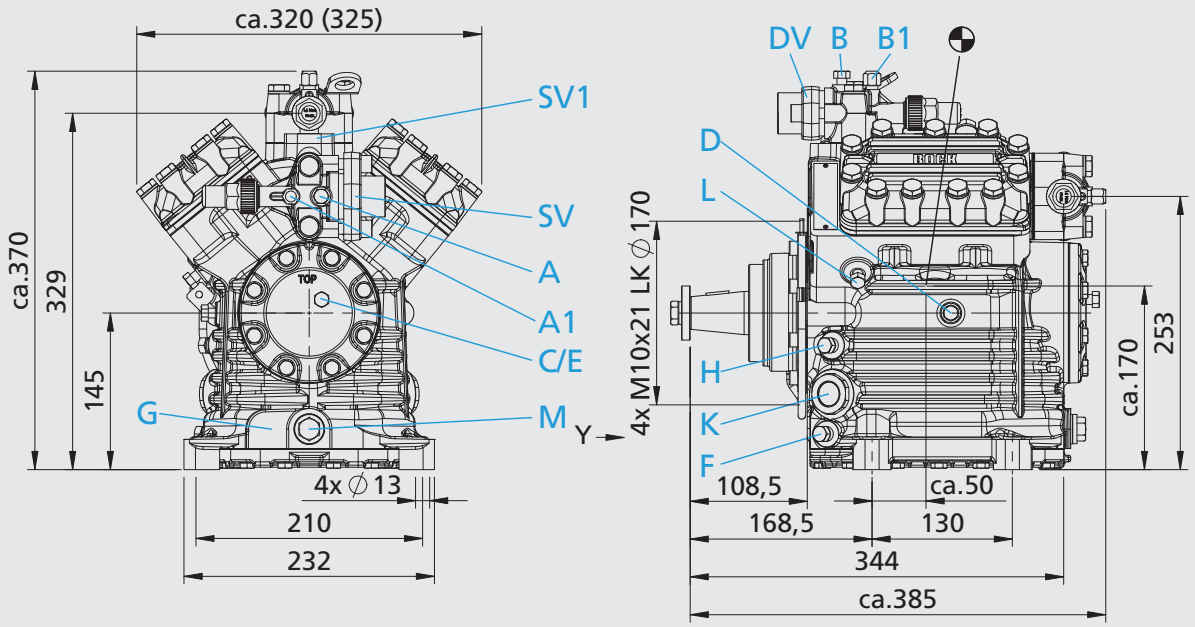

Dimensions in ( ) = K Design

Shaft end

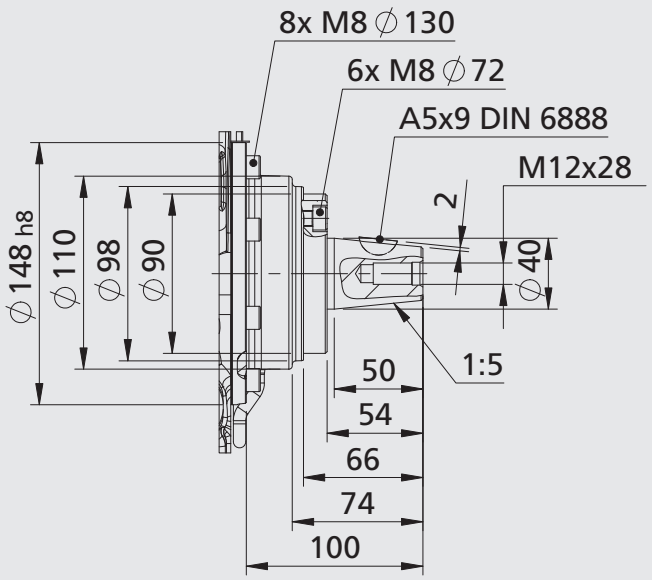

View Y

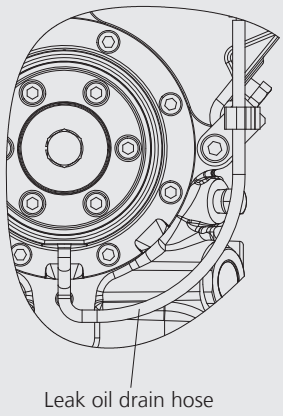

Dimensions in mm
Centre of gravity

Connections see page 26

09689-08.2012-Gb Subject to change without notice

Dimensions and connections

FK50	FK50/660 K FK50/660 N	FK50/775 K FK50/775 N	FK50/830 K FK50/830 N	FK50/980 K FK50/980 N

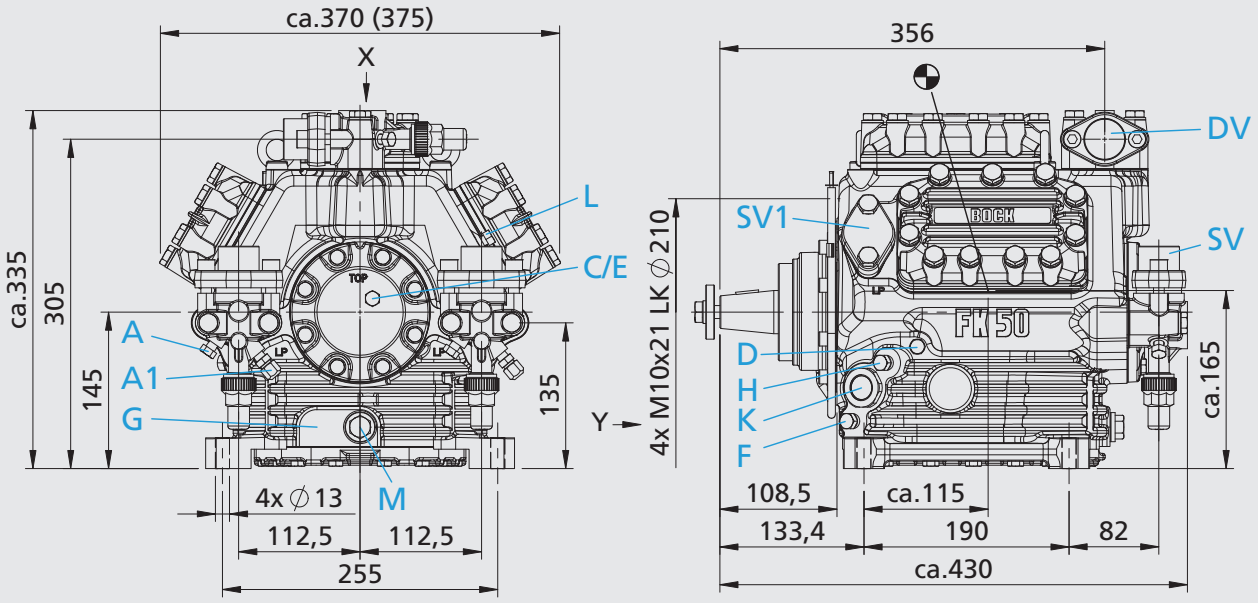

Dimensions in ( ) = K Design

Shaft end	View X	View Y

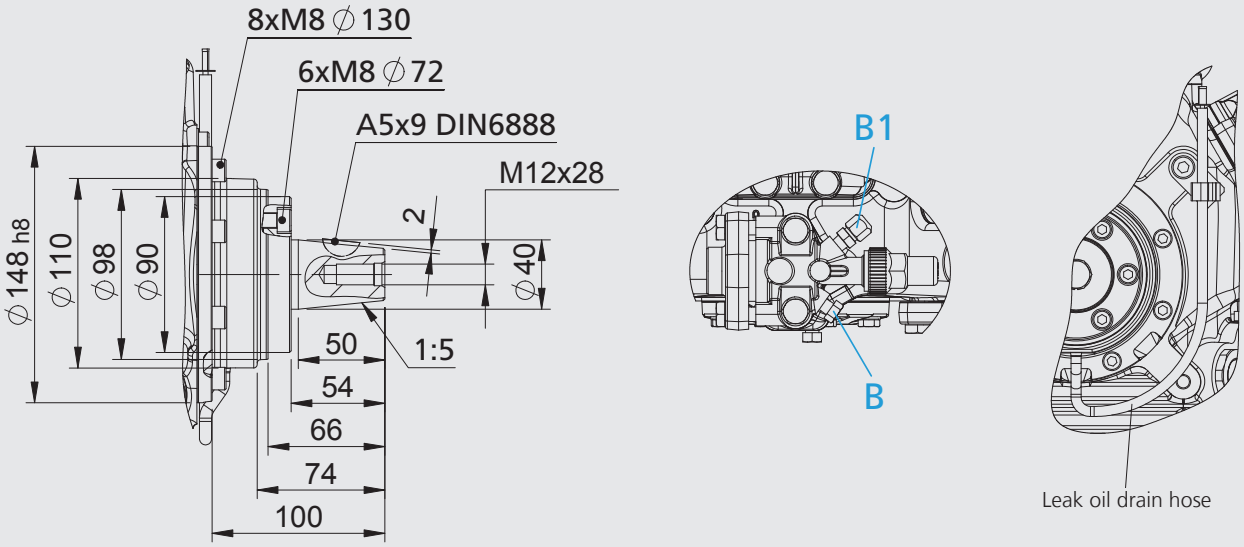

Dimensions in mm
Centre of gravity

Connections see page 26

Dimensions and connections

Connections		FK20	FK30	FK40	FK50
SV DV	Suction line Discharge line	please refer to technical data page 21			
A	Connection suction side, not lockable	7/16 " UNF	7/16 " UNF	1/8 " NPTF	1/8 " NPTF
A1	Connection suction side, lockable	7/16 " UNF	7/16 " UNF	7/16 " UNF	7/16 " UNF
A2	Connection suction side, not lockable	1/8 " NPTF	1/8 " NPTF	-	-
B	Connection suction side, not loackable	7/16 " UNF	7/16 " UNF	1/8 " NPTF	1/8 " NPTF
B1	Connection discharge side, lockable	7/16 " UNF	7/16 " UNF	7/16 " UNF	7/16 " UNF
C	Connection oil pressure safety switch OIL	-	1/8 " NPTF	1/8 " NPTF	1/8 " NPTF
D	Connection oil pressure safety switch LP	-	1/4 " NPTF	1/8 " NPTF	1/8 " NPTF
E	Connection oil pressure gauge	-	1/8 " NPTF	1/8 " NPTF	1/8 " NPTF
F	Oil drain	G 1/8 "	M 22 x 1,5	1/4 " NPTF	1/4 " NPTF
G	Optional connection oil sump heater	○ 1)	○ 1)	○ 1)	○ 1)
H	Oil charge plug	1/4 " NPTF	1/4 " NPTF	1/4 " NPTF	1/4 " NPTF
K	Sight glass	○ 2)	1 1/8 " - 18 UNEF	2 x 1 1/8 " - 18 UNEF	2 x 1 1/8 " - 18 UNEF
L	Connection thermal protection thermostat	○ 3)	1/8 " NPTF	1/8 " NPTF	1/8 " NPTF
M	Oil filter	-	M 22 x 1,5	M 22 x 1,5	M 22 x 1,5
SV1	Optional connection suction line valve	-	●	●	●

● Option available

○ Available on request

1) No connection available as standard (connection M 22 x 1,5)

2) Standard is without sight glass (connection M 20 x 1)

3) No connection available as standard (1/8" NPTF, intermediate flange required)

09689-08.2012-Gb Subject to change without notice

Dimensions and connections

Dimensions with accessories

FK20 K FK20 N | FK30 K FK30 N | FK40 K FK40 N | FK50 K FK50 N

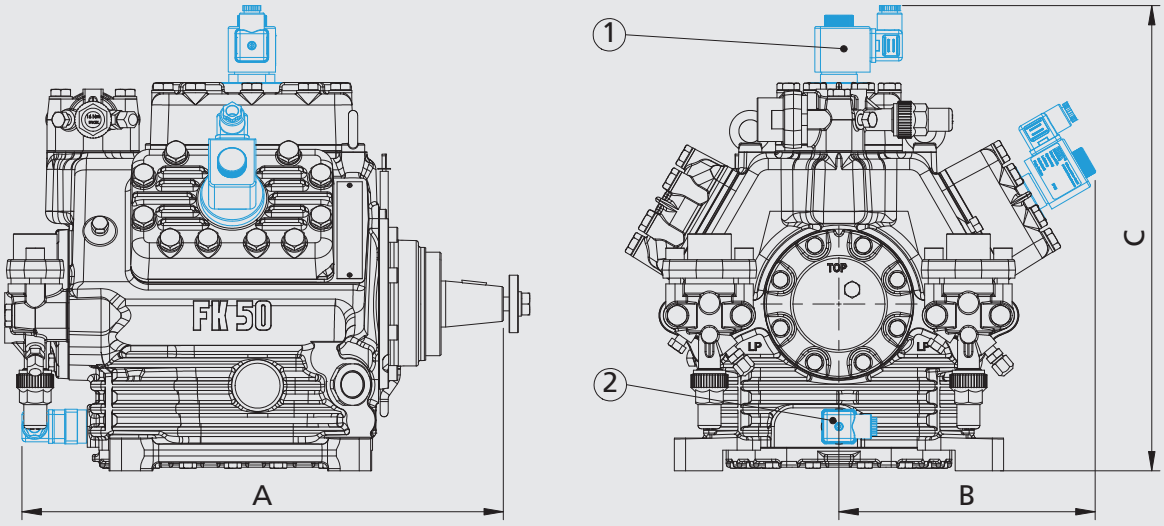

(1) Capacity regulator (2) Oil sump heater

Type	A mm	B mm	C mm
FK20 N, K	ca. 290	-	-
FK30 N, K	ca. 355	-	-
FK40 N	ca. 410	ca. 180	-
FK40 K	ca. 410	ca. 185	-
FK50 N	-	ca. 225	ca. 405
FK50 K	-	ca. 240	ca. 420

Scope of supply

Scope of supply	FK20	FK30	FK40	FK50
Open type compressor in a light weight alumininium construction, with suction and discharge valves	●	●	●	●
Two cylinder, cylinder arrangement in row	●	●		
Four cylinder, cylinder arrangement in V			●	
Six cylinder, cylinder arrangement in W				●
Integrated oil collecting system for the shaft seal, hose drain design		●	●	●
Seat front bearing flange		●	●	●
Fastening possibility for electromagnetic clutch	●	●	●	●
Possible design variants: [1] K-Design	●	●	●	●
N Design	●	●	●	●
Oil charge: FK: FUCHS Reniso SP 46 FKX: FUCHS Reniso Triton SE 55	●	●	●	●
One sight glass		●		
Two sight glasses			●	●
Decompression valve		● [2]	●	●
Inert gas charge	●	●	●	●

[1] Only the selected design variant is contained in the scope of supply.

[2] Only for models FK30/275 + 325

The scope of supply is the same for the various levels of displacement and the design variants K and N.
In the data concerning the type of compressor, these additions are not taken into account.

09689-08.2012-Gb Subject to change without notice

Accessories

Accessories	FK20	FK30	FK40	FK50
① Capacity regulator 24 V DC: 1 capacity regulator = 50 % residual capacity IP65 [1]			●	
Capacity regulator 24 V DC: 1-2 capacity regulato = 66/33 % residual capacity IP65 [1]				●
② Electromagnetic clutch 24 V DC LA 21, Ø 147 mm, 2 x SPA, Power consumption 48 W [1] [2] [4]	●			
Electromagnetic clutch 24 V DC LA 30.01, Ø 174 mm, 2 x SPA, Power consumption 51 W [1] [2] [4]		●		
Electromagnetic clutch 24 V DC LA 16.028, Ø 153 mm, 2 x SPB, Power consumption 60 W [1] [2] [4] bis 775			●	●
Electromagnetic clutch 24 V DC LA 26.02, Ø 203 mm, 2 x SPB, Power consumption 62 W [1] [2] [4] 830 und 980				●
③ Compressor flywheel (three-spoke, grey cast iron) Ø 165 mm, 2 x SPA	●			
Compressor flywheel (three-spoke, grey cast iron) Ø 210 mm, 2 x SPA		●		
Compressor flywheel (three-spoke, grey cast iron) Ø 210 mm, 3 x SPA			●	●
④ Oil sump heater 24 V DC, 40 W IP65 [1]	●			
Oil sump heater 24 V DC, 80 W IP65 [1]		●	●	●
⑤ Thermal protection thermostat (bimetal sensor) IP67	● [3]	●	●	●
⑥ Intermediate flange for changing the position of the shut-off valves [2] Oval flange, height 5, 12, 15, 25, 34, 46, 62, 71, 75 oder 95 mm		●	●	●
Sight glass	● [5]			

[1] Other voltages on request
[2] Other designs on request
[3] With intermediate flange
[4] Product by Linnig
[5] Possible just ex works, cannot be retrofitted

The accessories are the same for the various levels of displacement and the design variants N and K. In the data concerning the type of compressor, these additions are not taken into account.

Capacity regulator

Electromagnetic clutch

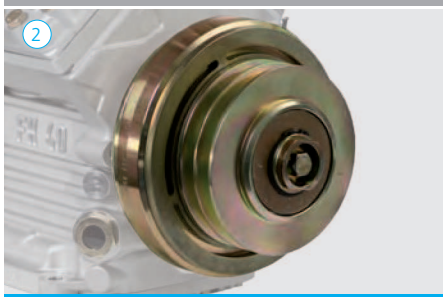

Compressor flywheel

Oil sump heater

Thermal protection thermostat

Intermediate flange